24. INSPECT TRANSMISSION CLUTCH HUB NO. 1 (See page MX-82)

INSPECTION

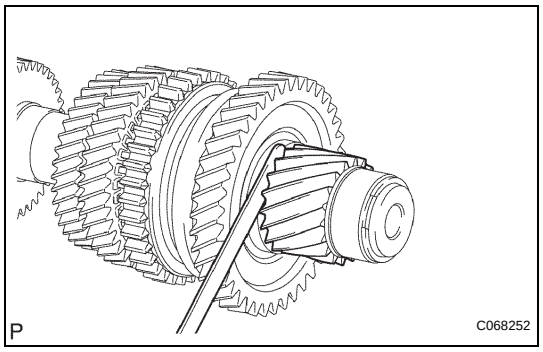

1. INSPECT 1ST GEAR THRUST CLEARANCE

(a) Using a feeler gauge, measure the 1st gear thrust clearance.

Standard clearance:
0.10 to 0.40 mm (0.0039 to 0.0157 in.)

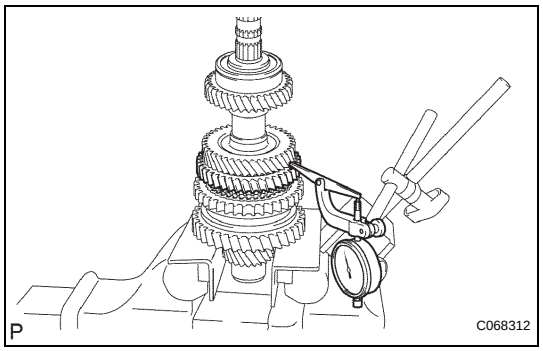

2. INSPECT 2ND GEAR THRUST CLEARANCE

(a) Using a dial indicator, measure the 2nd gear thrust clearance.

Standard clearance:
0.10 to 0.45 mm (0.0039 to 0.0177 in.)

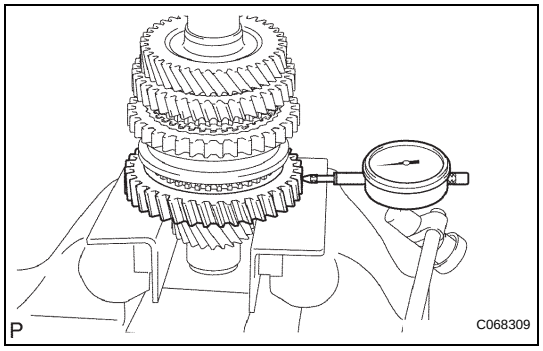

3. INSPECT 1ST GEAR RADIAL CLEARANCE

(a) Using a dial indicator, measure the 1st gear radial clearance.

Standard clearance

Bearing	Clearance: mm (in.)
KOYO made	0.015 to 0.058 (0.0006 to 0.0023)
NSK made	0.015 to 0.056 (0.0006 to 0.0022)

If the clearance is out of specification, replace the 1st gear needle roller bearing.

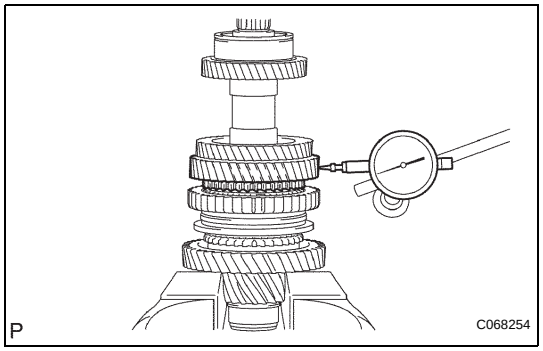

4. INSPECT 2ND GEAR RADIAL CLEARANCE

(a) Using a dial indicator, measure the 2nd gear radial clearance.

Standard clearance

Bearing	Clearance: mm (in.)
KOYO made	0.015 to 0.058 (0.0006 to 0.0023)
NSK made	0.015 to 0.056 (0.0006 to 0.0022)

If the clearance is out of specification, replace the 2nd gear needle roller bearing.

cardiagn.com

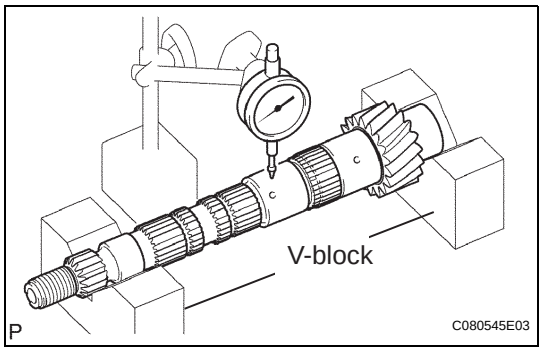

5. INSPECT OUTPUT SHAFT

(a) Using a dial indicator and 2 V-blocks, measure the shaft runout.

Maximum runout:
0.015 mm (0.0006 in.)

If the runout exceeds the maximum, replace the output shaft.

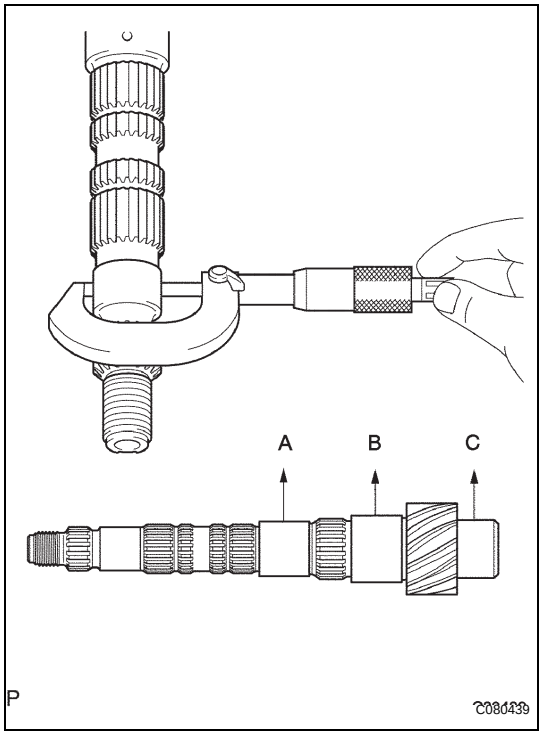

(b) Using a micrometer, measure the outer diameter of the output shaft journal surface.

Outer diameter:
Part A:
31.985 mm (1.2592 in.)
Part B:
37.985 mm (1.4955 in.)
Part C:
32.985 mm (1.2986 in.)

If the outer diameter is below the minimum, replace the output shaft.

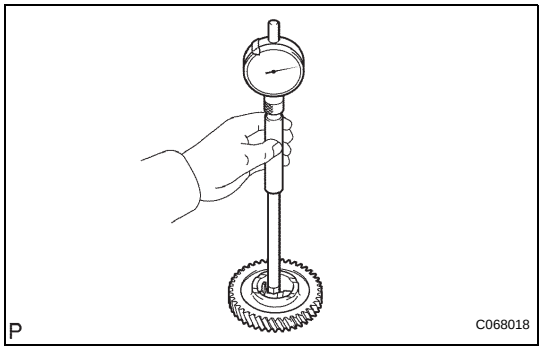

6. INSPECT 2ND GEAR

(a) Using a cylinder gauge, measure the inside diameter of the 2nd gear.

Inside diameter

New gear: mm (in.)	Maximum inside diameter: mm (in.)
38.015 to 38.031 (1.4967 to 1.4973)	38.031 (1.4973)

If the inside diameter exceeds the maximum, replace the 2nd gear.

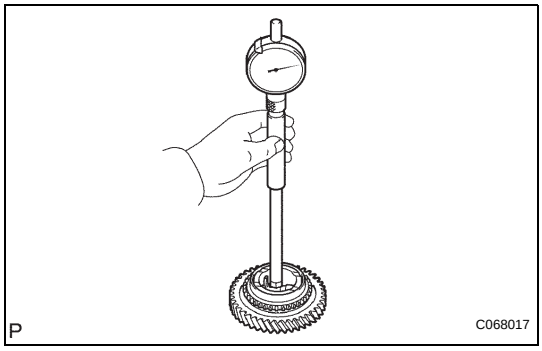

7. INSPECT 1ST GEAR

(a) Using a cylinder gauge, measure the inside diameter of the 1st gear.

Inside diameter

New gear: mm (in.)	Maximum inside diameter: mm (in.)
44.015 to 44.031 (1.7329 to 1.7335)	44.031 (1.7335)

If the inside diameter exceeds the maximum, replace the 1st gear.

cardiagn.com

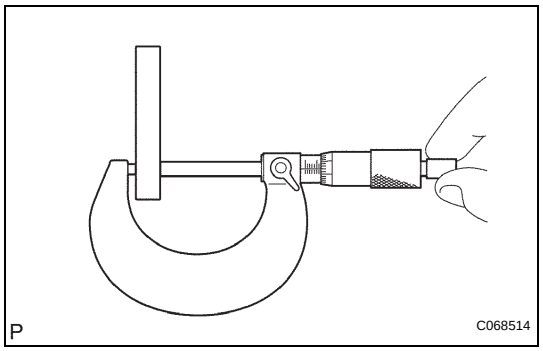

8. INSPECT 1ST GEAR THRUST WASHER

(a) Using a micrometer, measure the thickness of 1st gear thrust washer.

Thickness

New thrust washer: mm (in.)	Minimum thickness: mm (in.)
5.975 to 6.025 (0.2352 to 0.2372)	5.975 (0.2352)

If the thickness is below the minimum, replace the 1st gear thrust washer.

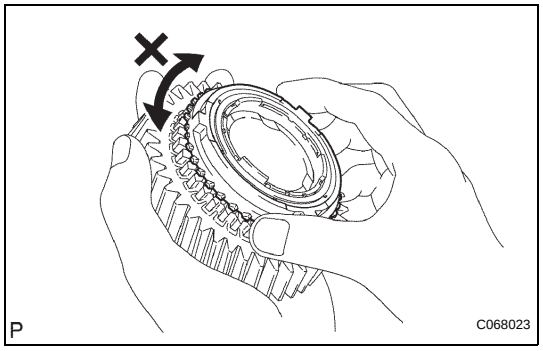

9. INSPECT SYNCHRONIZER RING SET NO. 2

(a) Coat the 2nd gear cone with gear oil.
Turn the synchronizer ring in one direction while pushing it against the 2nd gear cone. Check that the ring locks.
If the synchronizer ring does not lock, replace the ring or 2nd gear.

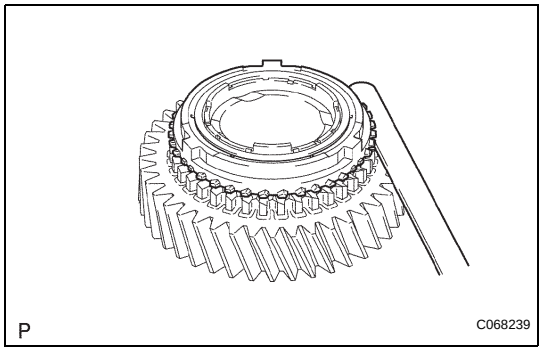

(b) Using a feeler gauge, measure the clearance between the synchronizer ring back and gear spline end.

Standard clearance:
0.7 to 1.3 mm (0.0276 to 0.0512 in.)

If the clearance is out of specification, replace the synchronizer ring set No. 2.

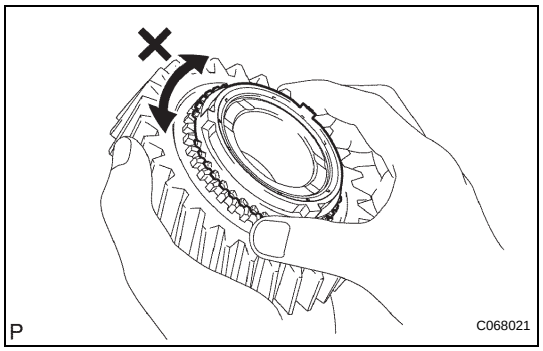

10. INSPECT SYNCHRONIZER RING NO. 1

(a) Coat the 1st gear cone with gear oil.
Turn the synchronizer ring in one direction while pushing it against the 1st gear cone. Check that the ring locks.
If the synchronizer ring does not lock, replace the ring or 1st gear.

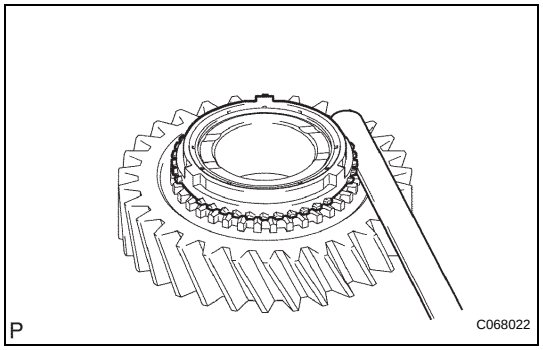

(b) Using a feeler gauge, measure the clearance between the synchronizer ring back and gear spline end.

Standard clearance:
0.75 to 1.65 mm (0.0295 to 0.065 in.)

If the clearance is out of specification, replace the synchronizer ring No. 1.

cardiagn.com

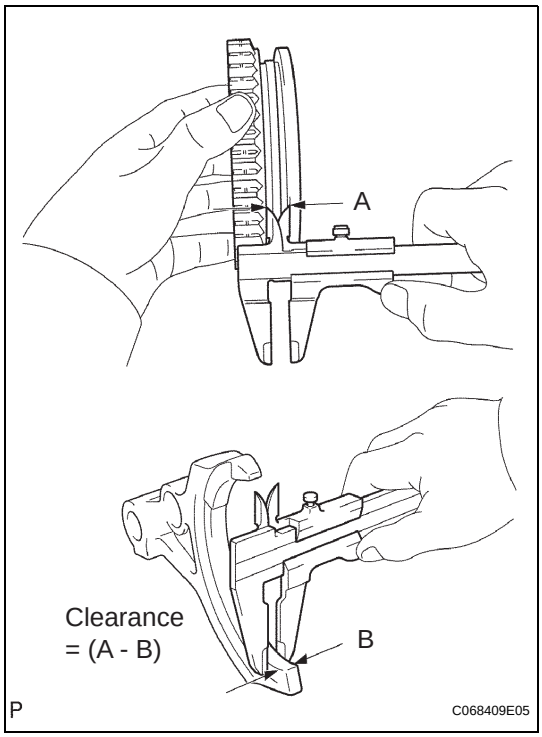

11. INSPECT REVERSE GEAR

(a) Using a vernier calipers, measure the width of the reverse gear groove (A) and the thickness of the claw part on the reverse shift fork (B), and calculate the clearance.

Standard clearance (A - B):
0.15 to 0.35 mm (0.0059 to 0.0138 in.)

If the clearance is out of specification, replace the reverse gear and reverse shift fork.

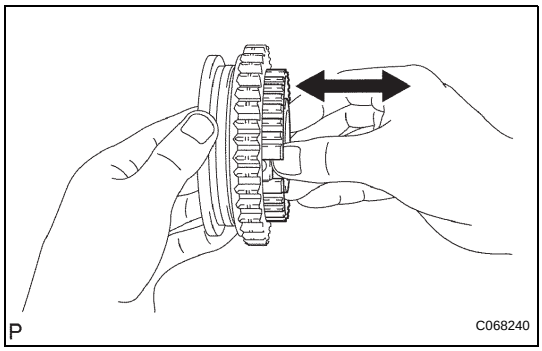

12. INSPECT TRANSMISSION CLUTCH HUB NO. 1

(a) Check that the transmission clutch hub No. 1 and reverse gear sub-assembly slides smoothly.

(b) Check that the spline gear's edges of the reverse gear sub-assembly is not worn down.

cardiagn.com